Heliyon 9 (2023) e19740

Contents lists available at ScienceDirect

Heliyon

journal homepage: www.cell.com/heliyon

Analysis of parental goals according to family variables. Implications for quality education in secondary education

Ana Eva Rodríguez-Bravo [a,*], María Ángeles Murga-Menoyo [b]

[a] UNED, National Distance Education University, Spain
[b] UNESCO Chair in Environmental Education and Sustainable Development. UNED

ARTICLE INFO

Keywords:
Parental achievement goals
Family variables
Exploratory study
Secondary education
Family-school relationship

ABSTRACT

This paper presents an exploratory study to identify the parental achievement goals of families in Spain and to detect peculiarities, in terms of their socio-demographic and socio-economic characteristics. A total of 1590 families, represented by one of the two parents, participated by means of convenience sampling. The data were collected through a questionnaire developed *ad hoc,* validated by using a Confirmatory Factor Analysis. Data processing included descriptive analyses and comparisons between groups, looking for possible significant differences. The results indicate that the task mastery-oriented goal prevails in this research sample, but also that more than half of the participants guide their children towards task success. Therefore, a broad group of subjects simultaneously conveys two different types of goals with divergent orientations, a fact that could lead to a conflict of values for adolescents. Regarding the relationship with the socio-demographic and socio-economic variables of the families, their greatest influence is in the case of the goal oriented towards failure, being lower in the goal aimed at success and decreasing significantly in the goal oriented towards mastery of the task. The results of this study suggest the necessity to offer, within the framework of universal parenting programmes, specific projects which help parents to clarify the values inherent in their parental achievement goals from the perspective of positive parenting. In addition, teachers should be trained in this aspect so that, in exercising their tutorial role, they can encourage all families to attain the goals of parental achievement associated with the quality of education.

1. Introduction

A large body of literature supports the relationship between parenting styles and the academic performance of students in secondary education through mediating variables that shape children's personalities [1,2,3,4,5,6]. Sound research confirms and offers empirical support to the statements of the United Nations, UNESCO and numerous other bodies which recognise families as primary educational agents. From this the right of families to participate in the management of educational institutions is derived, but also, as 2030 Agenda calls for, the commitment of institutions to provide 'inclusive and equitable quality education at all levels (…) including through safe schools and cohesive communities and families' [7, p. 7]. The school-family relationship thus shows different and complementary aspects; among them is the cooperation between both actors in the formative processes of teenagers. In this collaboration, whether informal or intentional, parental achievement goals play a decisive role in the teaching-learning processes of

* Corresponding author.
E-mail address: anaeva.rodriguez@edu.uned.es (A.E. Rodríguez-Bravo).

https://doi.org/10.1016/j.heliyon.2023.e19740
Received 12 January 2023; Received in revised form 25 August 2023; Accepted 31 August 2023
Available online 5 September 2023
2405-8440/© 2023 The Authors. Published by Elsevier Ltd. This is an open access article under the CC BY-NC-ND license (http://creativecommons.org/licenses/by-nc-nd/4.0/).

students.

This paper presents an exploratory study that looks to identify the parental achievement goals of Spanish families and see whether there are any peculiarities detected according to their socio-demographic and socio-economic features. Its focus is on secondary education in order to pinpoint specific educational needs that should be addressed within the framework of universal parental training and teacher training programmes for their tutoring role. The aim is to foster in all families – through the mediation of teachers and from an inclusive approach – those parental goals that facilitate quality education in schools.

2. Background

For an effective internalisation of social norms and values, and for the achievement of optimal emotional development and personal well-being, the satisfaction of basic psychological needs is required [8]. These needs are universal and are, irrespective of culture, linked to human motivation. Following Self-determination Theory, they are autonomy, competence and relatedness [9,10,11]. Autonomy implies experiencing a sense of volition and choice when undertaking an activity, while competence refers to the experience of feeling capable of carrying it out effectively. Relatedness concerns the human need for connection with other people [11,12,13].

The fulfilment of these needs depends on social factors associated with the context in which the individual lives [12,14], which is why, during childhood and adolescence, the family and in particular parental educational styles are particularly important for meeting these needs [8]. Parental educational styles have been defined as practical behavioural patterns that promote different emotional climates in which parenting takes place. The typologies that systematise them are only indicative, as parents modify them and create their own hybrid versions, depending on the evolutionary development of their children and other factors such as age, gender, birth order and character, family circumstances and the children's own choices [15].

Parenting styles – democratic, authoritarian, permissive and neglectful – can be differentiated according to the weight of the parental dimensions involved: affection/warmth, autonomy support vs parental control and structure [16,17]. Regarding autonomy and competence needs, these can be fulfilled through parental styles characterised by autonomy support and the existence of a structured and organised family environment which facilitates teenager competence – neither controlling nor manipulative – while the provision of affection/warmth contributes to the need of relatedness [12].

In respect of children's learning, research indicates that parenting styles in which affection reigns are the ones that produce the best results; that is, control is not the prevalent variable. Research also indicates that encouraging adolescents' personal autonomy allows them to feel in control of their actions. This dimension is highly valuable from an educational perspective [18,19].

Within the framework of parental styles, one of the significant elements is parental achievement goals. They are inherent to the exercise of the parental function and, equally, of an important influence on the academic performance of students. In line with the Self-determination Theory, these goals characterise the type of achievement towards which parents direct their children and guide their children's efforts to persist with and develop their engagement in tasks [20]. In short, they are concerned with what a person's behaviour is for, the purpose for which he or she acts.

These goals can be differentiated into intrinsic and extrinsic, both of which can be found in all individuals, although one or the other tends to prevail [14]. Intrinsic goals are linked to the satisfaction of basic psychological needs for autonomy, competence and relatedness; they contribute to psychological well-being and positive adjustment, and are more autonomously regulated. Extrinsic goals drive interpersonal comparison and approval seeking; they are associated with poor psychological well-being and greater external control.

Mageau et al. [21] identify three types of parental achievement goals that influence children's learning: some are task mastery-oriented, others are success-oriented, and a third is failure-avoidance-oriented.

In the former, parents are more interested in their children's deepening their learning, understanding the content being studied and developing their own competence, without making comparisons with other people around them. This type of goal contributes to the development of intrinsic motivation in children, which favours psychological well-being and behavioural self-regulation. In task success-oriented goals, parents favour competitiveness, which leads them to constantly compare, implicitly or explicitly, their children with their classmates. They promote interpersonal comparison and approval-seeking in their adolescents, triggering in them the need to demonstrate greater competence than others in the performance of a task. Finally, when children's competence is assessed as low, parents tend to choose parental goals oriented towards failure avoidance so that their children can avoid situations in which, if they fail, feelings of inferiority and frustration are aroused.

Research suggests that task mastery-oriented parental goals have a positive influence on adolescents' academic performance, intrinsic motivation, autonomy, self-concept and psychological well-being. They also lead them to be more autonomous and self-regulated in their homework, and to carry it out with greater attention, persistence, curiosity and effort. By contrast, success-oriented goals seem to contribute negatively to the development of children's school engagement and academic achievement. They enhance a maladaptive perfectionism and negatively affect the development of self-concept and psychological well-being of teenagers. Finally, goals oriented towards the avoidance of failure have a negative influence not only on children's intrinsic motivation for homework, but also on their school engagement and academic performance. These types of goals are associated with low self-concept and poor psychological well-being [[20,21]].

From the above, parental achievement goals can operate as either facilitating or constraining factors for autonomy, with proven effects on adolescents' self-regulated learning and achievement of optimal academic results [22,23,24]. Consequently, it would be good to enhance those goals linked to a positive parenting style which contributes to motivation for learning and performance in students. This should be parenting understood as 'parental behaviour based on the best interests of the child that is nurturing, empowering, non-violent and provides recognition and guidance which involves setting of boundaries to enable the full development

of the child' [25].

Promoting in parents the kind of parental achievement goal related to self-regulated learning and student engagement in learning processes is perceived as essential to quality education [26]. It requires understanding the involvement and commitment of families in the formal education of their children as a parental competence that should be promoted by schools through the decisions and actions of management teams and teaching staff [27,28,29]. The current study aims to contribute to this process through an exploratory approach to the current parental achievement goals of Spanish families and possible differences within them, depending on the socio-demographic and socio-economic characteristics of the parents. The objective is to encourage, from an inclusive point of view, pedagogical guidelines to promote those parental goals that help to improve the quality of school education.

This research was conducted with the voluntary collaboration in data collection of the students of the Master's Degree in Secondary Education Teacher Training of Spain, with a wide geographical location by area of residence. Each of these students polled at least three of the subjects in the research sample. All respondents fulfilled the requirement of being a parent of a student in formal education, either at secondary school level or in non-university higher education.

3. Methodology

3.1. Participants

The research participants were selected by convenience sampling. A total of 1590 families comprised the study sample, represented by one of the two parents. The most relevant socio-demographic and socio-economic features of these families are shown in Table 1.

The sample included families residing in the seventeen autonomous communities in Spain and the autonomous cities of Ceuta and Melilla, in Northern Africa, as shown in Table 2.

Table 1
Sample characteristics.

Variable			
Total		N	%
Gender	Man	529	33.3
	Woman	1059	**66.6**
	Not given	2	0.1
Age group	<40 years old	210	13.2
	40 to 50 years old	849	**53.4**
	>50 years old	531	33.4
Marital status	**Married**	1148	**72.2**
	Divorced	245	15.4
	Unmarried partner	98	6.2
	Single	99	6.2
Job position	**Managers and professionals**	582	**36.6**
	Senior technician	129	**8.1**
	Administrative and service workers	322	20.3
	Self-employed workers	201	12.6
	Qualified and semi-qualified workers	164	10.3
	Artists and sportsmen and women	44	2.8
	Unskilled workers	148	9.3
Level of education	No education or basic education	262	16.5
	Vocational Training	339	21.3
	Baccalaureate	171	10.8
	Degree	547	**34.4**
	Master's Degree/PhD	271	**17.0**
Child educational level	**Compulsory Secondary Education**	1034	**65.0**
	Baccalaureate	435	27.4
	Vocational Training	120	7.5
	Not given	1	0.06
Child position	**Only child**	370	**23.3**
	First	613	**38.6**
	Second	450	28.3
	Third	121	7.6
	Other	36	2.3
School type	**State funded**	1047	**65.8**
	Subsidised	425	26.7
	Private	117	7.4
	Not given	1	0.06

Source: Authors

Table 2
Distribution of the sample by autonomous communities.

Autonomous Community	Andalusia	201	12.6
	Aragon	71	4.5
	Asturias	32	2.0
	Balearic Islands	38	2.4
	Canary Islands	103	6.5
	Cantabria	15	0.9
	Castile La-Mancha	78	4.9
	Castile and Leon	101	6.4
	Catalonia	154	9.7
	Ceuta	5	0.3
	Extremadura	42	2.6
	Galicia	194	12.2
	La Rioja	14	0.9
	Madrid	160	10.1
	Melilla	4	0.3
	Murcia	80	5.0
	Navarre	34	2.1
	Basque Country	99	6.2
	Valencia	165	10.4
Total		1590	100.0

Source: Authors

3.2. Instrument

The instrument used to collect information was a structured questionnaire, developed *ad hoc* for the purposes of the study. It includes twenty questions: a) nine multiple-choice questions on socio-demographic and socio-economic variables of the participants; and b) eleven questions to collect information on parental achievement goals, in this case adjusted to a Likert-type scale, with five ratings, as follows: 1 (do not agree at all) to 5 (completely agree). The variables concerning the goals were operationally defined, basing their definitions on the theoretical framework of Mageau et al. [21] and Inda-Caro et al. [20]; the relevant items are presented in Table 3.

3.3. Procedure

Families participated on a voluntary basis and filled in the questionnaires themselves. Previously, they were informed of the purposes of the study and the confidentiality of the responses was respected in accordance with the protocol established by the Declaration of Helsinki (64th WMA, Brazil, October 2013). In addition, the requirements of the University's Ethics Committee for research projects involving human subjects have been met and a certificate of compliance has been obtained. The questionnaire was implemented online using the Google Form tool. Data collection took place during November 2021.

3.4. Data analysis

The research used a quantitative methodology, including descriptive analyses and comparisons between groups, looking for possible significant differences in the parental achievement goals of the participating families according to the socio-demographic and socio-economic variables taken into account. To this effect, the categories of the variables age, level of education and marital status were previously recoded in order to obtain groups with a size of no fewer than 50 subjects.

Differences between measures of central tendency of the groups were analysed, using tests for comparison of means and/or medians, depending on the parametric or non-parametric quality of the variables. T-Student tests were applied in the case of two groups, and ANOVA in the case of more than two groups, assuming an approximation to normality and, therefore, parametric variables due to the large sample size. Stata and SPSS v.27 software were used to carry out these analyses.

Table 3
Operational descriptors of parental goals.

Task mastery-oriented goals	Success-oriented goals	Failure-avoidance-oriented goals
12. I think it is important that my child does his/her best in those activities in which he/she participates. 15. I actively support my child to improve in the activities in which he/she participates. 19. I consider it important for my child to improve in the activities he/she does.	11. I actively contribute to my child being the best in those activities in which he/she participates. 13. I want my child to excel in his/her activities. 16. I think it is important for my child to be better than others in the activities he/she does. 17. I encourage my child to strive to be first in everything he/she does.	10. I discourage my child from participating in activities in which I do not see him/her as competent. 14. I seek to prevent my child from doing activities in which he/she is less competent than others. 18. I discourage my child from doing activities in which he/she cannot be the best. 20. I discourage my child from doing activities where he/she cannot excel.

Source: Authors

3.5. Questionnaire validity and reliability

The questionnaire was validated by means of a Confirmatory Factor Analysis. Goodness of fit was analysed using the Root Mean Squared Error of Approximation (RMSEA) and the Comparative Fit Index (CFI) as criteria; a higher fit is considered when RMSEA <0.05 and CFI >0.95 [30]. The reliability of the scale was also analysed from the perspective of the internal consistency of the items, using Cronbach's alpha coefficient for each factor. This test enables us to measure the internal consistency in the different responses of each dimension. Cronbach's alpha values can be interpreted as acceptable (0.6-0.79), good (0.8-0.9) and excellent (>0.9) [31].

In order to complement the analysis of the scale items, and following the Item Response Theory (IRT), two parameters were obtained: the discrimination and the difficulty of each item. The discrimination parameter 'a' can be assessed following Baker's [32] criteria, where a value of 0.65 is used as a cut-off point for an item to have acceptable functioning; above 1.34 denotes that the item has a 'high' level of functioning, and above 1.69 indicates an item with 'very high' functioning. The Graded Response Model was used to determine these parameters [33] (see Grafic 1).

The indices obtained from the Confirmatory Factor Analysis were 0.081 (RMSEA) and 0.936 (CFI). According to Browne and Cudeck [34] an RMSEA value of up to 0.08 can still indicate a reasonable fit. Similarly, Hu and Bentler [35] have proposed that a CFI value as low as 0.90 could be considered acceptable. Therefore, the model can be considered suitable for possible theoretical reasoning, although the fit of the model could be improved in the future. The results of the analysis of the consistency of the scale and its dimensions are shown in Tables 4 and 5.

The reliability analysis of the scale from the perspective of the internal consistency of the items produced acceptable alpha values for factors 2 and 3, and good alpha values for factor 1, as shown in Table 6.

As can be seen in Table 7, the results of the IRT analysis, following the Graduated Response Model, reveal high or very high values for each factor or dimension in the discrimination parameter 'a' for each item. The two most discriminative items of the scale are 18 and 29 of the factor 1. Regarding the difficulty parameter, we see that the values of 'b' in each item are arranged in increasing order. This indicates that higher levels of the corresponding factor are required to select higher responses on the item scale. In general, using a scale for each factor between -3 and $+3$, we can say that the items in factor 1 are suitable for measuring high values of the factor, from about 0 onwards. Factor 2 items are designed to measure factor levels between -2.33 and 1.87, depending on the items. Items in factor 3 are appropriate for measuring low values of the factor with which they are associated.

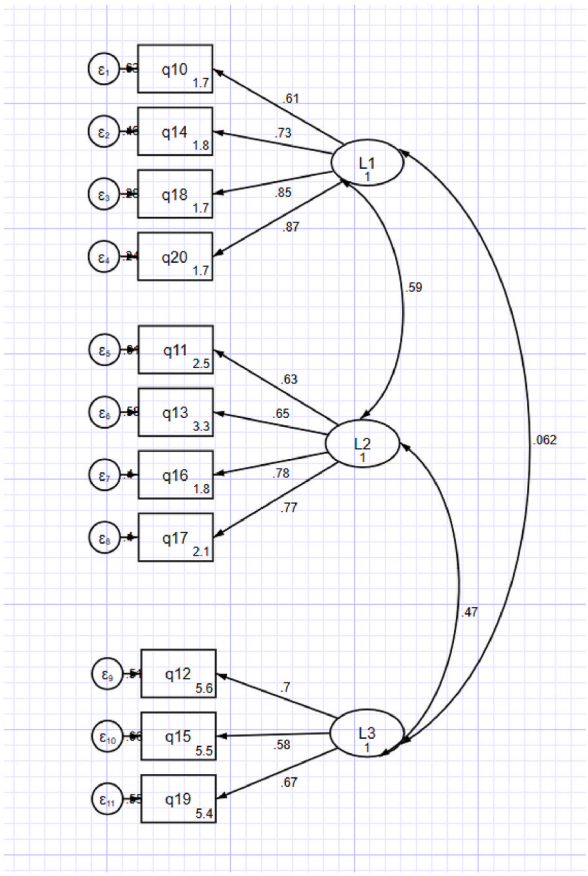

Grafic 1. Model Factorial Representation.

Table 4
Factorial model.

Fit statistic	Value	Description
Likelihood ratio		
chi2_ms(41)	469,134	model vs, saturated
p > chi2	0	
chi2_bs(55)	6724,648	baseline vs, saturated
p > chi2	0	
Population error		
RMSEA	.081	Root mean squared error of approximation
90% CI, lower bound	.075	
upper bound	.088	
pclose	0	Probability RMSEA ≤ .05
Information criteria		
AIC	44163,784	Akaike's information criterion
BIC	44357,158	Bayesian information criterion
Baseline comparison		
CFI	.936	Comparative fit index
TLI	.914	Tucker-Lewis index

Table 5
Factor loadings after CFA and correlations between factors.

Factor	Factor 1	Factor 2	Factor 3
	Factor loading	Factor loading	Factor loading
10. I discourage my child from participating in activities in which I do not see him/her as competent.	.61		
14. I seek to prevent my child from doing activities in which he/she is less competent than others.	.73		
18. I discourage my child from doing activities in which he/she cannot be the best.	.85		
20. I discourage my child from doing activities where he/she cannot excel.	.87		
11. I actively contribute to my child being the best in those activities in which he/she participates.		.63	
13. I want my child to excel in his/her activities.		.65	
16. I think it is important for my child to be better than others in the activities he/she does.		.78	
17. I encourage my child to strive to be first in everything he/she does.		.77	
12. I think it is important that my child does his/her best in those activities in which he/she participates.			.70
15. I actively support my child to improve in the activities in which he/she participates.			.58
19. I consider it important for my child to improve in the activities he/she does.			.67
Correlation Factor 1		.46*	.04
Correlation Factor 2			.37*

* Significant with p < .05. Source: Authors.

Table 6
Reliability analysis.

Factor	Factor 1		Factor 2		Factor 3	
	Items	α	Items	α	Items	α
	4	.843	4	.686	3	.799
Consistency	Good		Acceptable		Acceptable	

Source: Authors

4. Results

The results of the study are shown organised by each of the categories that allow us to typify parental goals: failure avoidance-oriented (Factor 1), success-oriented (Factor 2), and task mastery-oriented (Factor 3). Table 8 shows how the families' responses to the questions were distributed in each of the three factors.

In the case of Factor 1 (goals oriented towards failure avoidance), the families have notably expressed either total disagreement or little agreement with the assertions expressed in the questionnaire that would link them to this type of goal (p10 = 71.7%; p14 = 78.9%; p18 = 86%; p20 = 85.1%). Parents who recognise themselves to be in this position are hardly explicitly represented. It can be deduced from this that parents overwhelmingly perceive that they operate a parental practice which can be described as not emasculating but, on the contrary, as encouraging the learning of their children.

Regarding Factor 2 (success-oriented goals), a quarter of the subjects preferred the intermediate option of the Likert scale in all the answers (p11 = 27%; p13 = 29.4%; p16 = 22.1%; p17 = 26.1%). This selection could be interpreted as a sign of a certain degree of indecision among the families surveyed. However, it also shows that parents completely agree or just agree with the assertions in questions 11 (46.2%), 16 (17.6%) and 17 (32.1%), which refer to their children's desire to succeed in comparison with other

Table 7
Results of the IRT analysis with the Graduated Response Model.

n = 1590	a (SE)	b_1 (SE)	b_2 (SE)	b_3 (SE)	b_4 (SE)
Factor 1					
10. I discourage my child from participating in activities in which I do not see him/her as competent.	1.80 (.10)	0.03 (.04)	0.82 (.05)	1.67 (.08)	2.45 (.12)
14. I seek to prevent my child from doing activities in which he/she is less competent than others.	2.69 (.14)	0.12 (.04)	0.98 (.04)	1.77 (.07)	2.51 (.11)
18. I discourage my child from doing activities in which he/she cannot be the best.	4.43 (.30)	0.52 (.03)	1.18 (.04)	1.74 (.06)	2.25 (.09)
20. I discourage my child from doing activities where he/she cannot excel.	4.82 (.35)	0.45 (.03)	1.12 (.04)	1.74 (.06)	2.28 (.09)
Range of values Factor 1	*[1.8 to 4.82]*	*[0.03 to 0.52]*	*[0.82 to 1.18]*	*[1.67 to 1.77]*	*[2.25 to 2.51]*
Factor 2					
11. I actively contribute to my child being the best in those activities in which he/she participates.	1.64 (.09)	−1.67 (.08)	−0.86 (.05)	0.17 (.04)	1.15 (.06)
13. I want my child to excel in his/her activities.	1.73 (.09)	−2.33 (.11)	−1.5 (.07)	−0.22 (.04)	0.87 (.05)
16. I think it is important for my child to be better than others in the activities he/she does.	2.50 (.15)	−0.38 (.04)	0.28 (.04)	1.09 (.05)	1.87 (.08)
17. I encourage my child to strive to be first in everything he/she does.	2.81 (.16)	−0.80 (.04)	−0.22 (.03)	0.54 (.04)	1.23 (.05)
Range of values Factor 2	*[1.64 to 2.81]*	*[-2.33 to -0.38]*	*[-1.5 to 0.28]*	*[-0.22 to 1.09]*	*[0.87 to 1.87]*
Factor 3					
12. I think it is important that my child does his/her best in those activities in which he/she participates.	2.26 (.17)	−2.88 (.16)	−2.44 (.12)	−1.62 (.08)	−0.5 (.04)
15. I actively support my child to improve in the activities in which he/she participates.	1.67 (.12)	−3.88 (.28)	−2.81 (.16)	−1.65 (.09)	−0.34 (.04)
19. I consider it important for my child to improve in the activities he/she does.	2.14 (.17)	−3.69 (.28)	−2.57 (.14)	−1.34 (.07)	−0.15 (.04)
Range of values Factor 3	*[1.67 to 2.26]*	*[-3.88 to -2.88]*	*[-2.81 to -2.44]*	*[-1.65 to -1.34]*	*[-0.5 to -0.15]*

All in all, the questionnaire meets the requirements of the research objectives.
Source: Authors

adolescents in their environment. Only in question 13 (56.7%) is the family's desire simply aligned with the success of the students, without comparison. In short, more than 40% of the families who participated in the research adopt a parental goal oriented towards the success of the task, although the percentage of those who claim to encourage competitive behaviour in their sons and daughters is much lower.

Regarding the responses to the questions under Factor 3 (task mastery-oriented goals), there was a high level of agreement among the participating families, who completely agreed or just agreed with the corresponding sentences (p12 = 90%; p15 = 87.2%; p19 = 84.8%). In this case, the results confirm that a large majority of parents have a parental achievement goal consistent with the purpose of education as a training process for personal optimisation.

With reference to the mean differences between factors according to the socio-demographic and socio-economic variables of the families, Table 9 presents the mean differences detected and identified as significant. Only one of the variables, 'school type', seems to be irrelevant in relation to parental achievement goals. In all instances, the bilateral significance is greater than 0.05, which enables us to reject the hypothesis that the type of school attended by the children is related to parental achievement goals. By contrast, 'marital status' is the only variable that shows significant differences in the responses to the questions linked to the three categories (factors) of parental achievement goals studied. Here, in all cases a bilateral significance of less than 0.05 is found. This allows us to confirm the hypothesis that parents' marital status does relate to their achievement goals, in each of the three orientations studied.

Specifically, it should be highlighted that, in Factor 1 (parental achievement goals oriented towards avoiding failure), the differences which are significant are related to gender (p=<.001), age (p = .002), marital status (p = .001), job position (p = .004), level of education of the parent (p=<.001) and child's educational level (p = .011). A bilateral significance of less than 0.05 was found for all these variables. These data confirm that the socio-demographic and socio-economic variables influence parental achievement goals aimed at avoiding failure.

However, in Factor 2 (success-oriented goals), significant differences are only found for four parental characteristics: gender (p=<.001), marital status (p=<.001), job position (p = .001) and level of education (p = .015), for which a bilateral significance of less than 0.05 was obtained. Consequently, it is confirmed that these socio-demographic and socio-economic variables are linked to success-oriented parental achievement goals.

Finally, in Factor 3 (task mastery-oriented goals), the marital status (p = .004) of the respondent and the position of the child in the family structure (p = .030) are the only variables that have a bilateral significance of less than 0.05. These results suggest that both variables are related to task mastery-oriented parental goals, as significant mean differences between the groups are confirmed.

To sum up, the highest percentage of subjects, over 80%, declare a behaviour in accordance with the parental goal of achieving the 'mastery of the task', while 'avoiding failure' has very few parents who explicitly identify with it. However, significant differences are observed among the surveyed families according to the following variables, in descending order: gender, level of education, marital status, age, job position and educational level of the child.

Table 8
Descriptive results by factors.

Factor 1: Failure avoidance-oriented			
n = 1590		n	%
10. I discourage my child from participating in activities in which I do not see him/her as competent.	I do not agree at all	799	50.3
		341	21.4
		259	16.3
		124	7.8
	I agree completely	67	4.2
14. I seek to prevent my child from doing activities in which he/she is less competent than others.	I do not agree at all	849	53.4
		405	25.5
		226	14.2
		83	5.2
	I agree completely	27	1.7
18. I discourage my child from doing activities in which he/she cannot be the best.	I do not agree at all	1079	67.9
		287	18.1
		136	8.6
		61	3.8
	I agree completely	27	1.7
20. I discourage my child from doing activities where he/she cannot excel.	I do not agree at all	1043	65.6
		310	19.5
		156	9.8
		58	3.6
	I agree completely	23	1.4
Factor 2: Success-oriented			
n = 1590		**n**	**%**
11. I actively contribute to my child being the best in those activities in which he/she participates.	I do not agree at all	199	12.5
		227	14.3
		429	27.0
		394	24.8
	I agree completely	341	21.4
13. I want my child to excel in his/her activities.	I do not agree at all	83	5.2
		139	8.7
		467	29.4
		475	29.9
	I agree completely	426	26.8
16. I think it is important for my child to be better than others in the activities he/she does.	I do not agree at all	602	37.9
		358	22.5
		351	22.1
		178	11.2
	I agree completely	101	6.4
17. I encourage my child to strive to be first in everything he/she does.	I do not agree at all	387	24.3
		277	17.4
		415	26.1
		279	17.5
	I agree completely	232	14.6
Factor 3: Task mastery-oriented			
n = 1590		**n**	**%**
12. I think it is important that my child does his/her best in those activities in which he/she participates.	I do not agree at all	21	1.3
		24	1.5
		114	7.2
		395	24.8
	I agree completely	1036	65.2
15. I actively support my child to improve in the activities in which he/she participates.	I do not agree at all	9	.6
		36	2.3
		158	9.9
		450	28.3
	I agree completely	937	58.9
19. I consider it important for my child to improve in the activities he/she does.	I do not agree at all	5	.3
		35	2.2
		202	12.7
		488	30.7
	I agree completely	860	54.1

Source: Authors

In the case of 'success-oriented' goals, the results suggest a certain degree of indecision among the families surveyed, a quarter of whose responses are placed in intermediate positions on the Likert scale. Slightly more than 50% of the respondents acknowledge that their children are oriented towards task success, although the percentage of those who strongly agree with encouraging competitiveness among students is lower than 21%. It should also be noted that there are differences between the families surveyed according to the following variables: gender, marital status, job position and level of education.

Table 9
Group comparison of the three factors.

Variable		Factor 1	p-value	Factor 2	p-value	Factor 3	p-value
Total		6.7994		11.9893		13.2981	
Gender	Man	6.5826		11.6837		13.2946	
	Woman	7.2344	**<.001***	12.6106	**<.001***	13.3025	.938
Age group	<40 years old	6.7048		11.8857		13.2429	
	40–50 years old	6.5677		11.9022		13.3404	
	>50 years old	7.2072	**.002***	12.1695	.442	13.2524	.634
Marital status	Married	6.6873		12.0392		13.3868	
	Divorced	7.5347		12.4653		13.2122	
	Unmarried partner	6.8980		11.8163		13.0408	
	Single	6.1818	**.001***	10.4040	**<.001***	12.7374	**.004***
Job position	Managers and professionals	6.5052		11.6942		13.3935	
	Senior technician	6.4651		11.4806		13.0233	
	Administrative and service workers	6.6957		12.4224		13.3447	
	Self-employed workers	7.1095		11.9652		13.2637	
	Qualified and semi-qualified workers	7.4146		12.6098		13.3476	
	Artists and sportsmen and women	6.5909		10.3182		12.8636	
	Unskilled workers	7.4324	**.004***	12.4932	**.001***	13.1824	.283
Level of education	No education or basic education	7.7481		12.6679		13.2290	
	Vocational Training	6.8820		12.0737		13.1622	
	Baccalaureate	7.1345		12.1520		13.4444	
	Degree	6.4369		11.7185		13.4077	
	Master's Degree/PhD	6.2989	**<.001***	11.6716	**.015***	13.2214	.250
Child educational level	Compulsory Secondary Education	6.6325		11.8221		13.2524	
	Baccalaureate	7.0253		12.2391		13.3356	
	Vocational Training	7.4250	**.011***	12.5333	.056	13.5417	.252
Child position	Only child	6.9054		11.9486		13.2000	
	First	6.5938		11.9853		13.4290	
	Second	7.0067		12.0244		13.2978	
	Third	6.6281		11.6860		12.8678	
	Other	7.1944	.254	13.0556	.500	13.5278	**.030***
School type	State funded	6.7001		11.9503		13.2627	
	Subsidised	6.9059		11.9624		13.3106	
	Private	7.3077	.126	12.4444	.439	13.5556	.280

* Test is significant at $p < .05$. Source: Authors.

Task mastery-oriented goals are the most frequently reported by parents, while significant differences between the surveyed families are found for only two variables: marital status and the child's position in the family structure.

In short, although the most common attitude of the families surveyed is to motivate their children towards the mastery of the task, this does not mean that they do not simultaneously encourage them towards success. These are the two types of parental goals that are common to a large proportion of the families surveyed. As for the relationship between parental achievement goals and socio-demographic and socio-economic variables, the highest correlations occur in relation to the goal oriented towards avoidance of failure, followed by the goal oriented towards success, and are considerably lower in the case of the goal oriented towards task mastery.

5. Discussion

The results of this study have met their initial purpose of identifying the predominant parental achievement goals and confirming their relationship with the socio-demographic and socio-economic variables of the families that participated in the research. Within the framework of school-family relationships, these results contribute to the awareness of this problem and to fostering training actions in schools to promote positive parenting [36]. They therefore support previous research, which calls for the need to promote achievement goals that foster self-regulated autonomy and a positive self-concept. These two variables enhance children's commitment to their own learning process, to the achievement of good academic results and to their psychological well-being [18,19,8,15].

In our study, the prevalence of the parental achievement goal linked to task mastery, as opposed to those oriented towards task success or the avoidance of failure, reflects a majority position which can be described as positive parenting. This is characterised by its contribution to the development in children of higher levels of autonomy, self-concept, psychological well-being and intrinsic motivation, all of which are variables that favour academic performance [20,21]. However, previous research has also shown that parents who make high academic and career aspirations explicit to their children offer a form of parental involvement which is more effective for academic socialisation during adolescence [37,38,39,40]. From this perspective the question arises as to where the priority lies, whether it is academic performance or the education of students in a more comprehensive sense.

The analysis of parental achievement goals is, therefore, a line of research that is not exhausted and which is indispensable to the quality of education. Likewise, those studies that support the relationship between parenting styles and the academic performance of secondary school students contribute to it through mediating variables which shape the personality of the children [1,2,3,4,5,6].

This study also contributes to our understanding of the problem of the relationship between parental achievement goals and socio-

demographic and socio-economic variables. The analysis of mean differences has revealed that the variables of gender, marital status, job position and parents' level of education are related to goals oriented towards the avoidance of failure as well as those oriented towards the success of the task. These results are consistent with other studies, such as those of Gonida & Cortina [22], Inda-Caro et al. [20], Mageau et al. [21], which had already demonstrated the influence of parental gender on parental goals. Similarly, the impact of these variables has previously been analysed within the framework of studies that point to high levels of parental education and belonging to middle or privileged occupational classes as predictors of children's good academic performance [41,39].

Along the same lines, several studies carried out in the Spanish context have highlighted gender as a variable of great relevance when analysing family involvement in the education of children, finding that mothers are more involved [37,42]. Regarding the influence of socioeconomic level, part of the research also shows that families with higher educational and economic levels have higher levels of involvement, which is reflected in a greater sense of belonging to the school, greater support in doing homework and the existence of habits that favour learning [42]. However, other research qualifies that the highest levels of involvement observed among families with higher socioeconomic status are focused on activities that require mobilising economic resources [42] and, in the case of secondary education, this involvement is reinforced when problems of academic performance and behaviour are observed in children to avoid school failure [37].

However, in items linked to task mastery-oriented goals the only variables that yielded significant differences were marital status and the child's position in the family structure. The former also shows a statistically significant relationship with the other two types of parental goals. These results are consistent with previous research that supports the connection between these variables and academic performance at school [43]. In both fields, suggestive lines of analysis are outlined for future research.

In summary, this study – carried out on a highly feminised research sample, mostly married, with a medium/high-skilled occupation and a university level of education – shows that the link between socio-demographic and socio-economic variables and parental achievement goals weakens as the latter lose their task mastery orientation, and is lowest when parents aim to steer their children towards the avoidance of failure.

The results also reveal some limitations to be avoided in future studies. Firstly, the RMSEA and CFI indices obtained indicate that the fit of the model could be improved, so a prior revision of the model will be necessary for future applications. Secondly the analysis of the items, following the Multiple Response Theory through the Graduated Response Model, has detected that, while the items corresponding to Factor 1 are suitable for measuring high values of this factor, the items of Factor 2 allow only medium values to be measured and those of Factor 3 allow only low values to be measured. Thus, it is essential to review the wording, subjecting it to expert judgement in terms of the two dimensions analysed: discrimination and difficulty. Thirdly, the procedure for recruiting families should be reconsidered, opting for a probabilistic and random sampling in order to improve socio-demographic representativeness. Finally, it is deemed advisable to include in future studies analysis of the size of the effects detected.

Limitations notwithstanding, the results of this study reinforce the need to include parental achievement goals as a relevant topic in universal parental training programmes of a group and preventive nature [44], developed from the perspective of positive parenting [36]. Schools are the natural environment for school-family collaboration and, therefore, an appropriate setting for fostering positive parenting and stimulating the co-responsibility of families in the learning processes, thus favouring self-determined autonomy and intrinsic motivation of students.

To this end, an innovative line of work that can raise a specific project is proposed; a project developed in several sessions, focused on parental achievement goals and with a mixed theoretical-practical methodological approach. In this way, it would be possible to combine the specialised knowledge of teachers and the life experience of parents so that both educational agents can improve their knowledge, techniques and guidelines for action.

In addition, teacher training in the specific issue of parental achievement goals is suggested as a strategy to reinforce competences. In the exercise of their tutoring role with families – both in groups and individually – these competences should enable teachers to promote goals in line with positive parenting, fostering self-regulated learning and self-determined motivation of students. Teachers' knowledge of young people and their families, their communication skills and their experience in group management are competences that should undoubtedly be exploited because of the clear influence they can have on the success of parental training programmes [45]. Likewise, within the framework of their tutorial function, the role that teachers can play in relation to parental achievement goals offers possibilities for building a good teacher-family bond. Moreover, it can encourage the participation of all families in parental training programmes, from an inclusive perspective, and not only from those who perceive the relationship with their children to be conflictive or vulnerable [46].

6. Conclusions

Parental achievement goals - aimed at task mastery, success and failure avoidance - are an inherent part of parenting. They can operate as either facilitating or constraining factors for autonomy and psychological well-being, and have proven effects on adolescents' self-regulated learning and optimal academic achievement. Therefore, within the framework of secondary education, it is relevant to know the type of goal associated with the exercise of positive parenting which may favour the development of these attributes. The aim of this study was to find out the parental achievement goals of Spanish families and to identify possible differences according to their socio-demographic and socio-economic features. The intention is to promote in all families those parental goals that facilitate the quality of school education, from an inclusive perspective and through the mediation of teachers in the exercise of their tutoring role.

The results reveal that in this research sample the goal oriented towards task mastery prevails, a goal that recognised studies support as favouring autonomy, psychological well-being, children's positive self-concept and intrinsic motivation. But also, more than

half of the parents recognise that they orient their children towards task success, although the group of those who claim to promote competitive behaviours is small. Taking both positions into account and looking at the data, it can be observed that one group of parents simultaneously transmits two types of goal: task mastery-oriented and success-oriented. This double focus could in some cases entail a conflict of values between success and mastery of the task, both related to academic performance, but with different nuances in terms of the personal development of adolescents. The pressure for children to do well academically could be hindering the parental message of task mastery. This study suggests the need to reinforce the training of parents so that they can clarify their values, reflect with ethical criteria on their own parental goals and reinforce positive parenting aimed at quality education.

In terms of the relationship between parental achievement goals and the socio-demographic and socio-economic variables of the families, it is worth noting that the greatest influence is produced in the case of the goal oriented towards failure avoidance. Here significant differences have been identified in six variables (gender, age, marital status, job position, level of education of the parent and educational level of the child). In the case of the success-oriented goal, the impact of socio-demographic and socio-economic variables is smaller, as significant differences were only found for four variables (gender, marital status, job position and educational level of the parent). The influence of these variables is notably reduced in the case of the task mastery-oriented goal, where significant differences were only observed in marital status and in the child's position in the family structure. The variable 'school type' seems to be irrelevant in relation to parental achievement goals, while 'marital status' showed significant differences in the case of all types of parental goals.

In order to strengthen the family-school relationship and the involvement of parents in the comprehensive education of adolescents, the results of this study suggest the need to promote specific projects that address parental achievement goals within the framework of universal family education programmes from the perspective of positive parenting. Likewise, it is necessary to strengthen this aspect of teacher training so that, in the exercise of their tutoring role, teachers can promote, from an inclusive perspective, those parental achievement goals linked to the quality of education in all families.

Ethics statement

The study received the approval (Ref. 2-EDU-2022) of the Research Ethics Committee of the National Distance Education University (Madrid, Spain). Therefore, it has been developed in accordance with the Declaration of Helsinki (seventh revision 2013, Fortaleza, Brazil). The participants provided their written informed consent to participate in this study.

Funding

This study has been funding from the Ministry of Science, Innovation and Universities through the project "La alfabetización ecosocial: un elemento central en los procesos de sostenibilización curricular para el logro de la Agenda 2030 (ODS) en la formación inicial del profesorado (PRAD-ODS). RTI2018-095746-B-I00" [Ecosocial literacy: a central element in the processes of curricular sustainability for the achievement of the 2030 Agenda (SDG) in initial teacher training]. IP1: Mª Ángeles Murga-Menoyo.

Author contribution statement

All authors listed have significantly contributed to the development and the writing of this article.

Data availability statement

Data associated with this study has been deposited at GoogleForm https://docs.google.com/forms/d/1ClIgeOyYmmRiSGHjQitAv8hS8N4f4RMLaAAtd7xvAGk/edit.

Additional information

No additional information is available for this paper.

Declaration of competing interest

The authors declare that they have no known competing financial interests or personal relationships that could have appeared to influence the work reported in this paper.

References

[1] M.C. Fuentes, R. García-Ros, F. Pérez-González, D. Sancerni, Effects of parenting styles on self-regulated learning and academic stress in Spanish adolescents, Int. J. Environ. Res. Publ. Health 16 (15) (2019) 2778, https://doi.org/10.3390/ijerph16152778.

[2] E. Jorge, M.C. y González, Estilos de crianza parental: una revisión teórica, Informes Psicológicos 17 (2) (2017) 39–67, https://doi.org/10.18566/infpsic.v17n2a02.

[3] D. Lanza, V. y Sánchez, Apoyo parental y su incidencia en el desarrollo de estrategias de aprendizaje en educación secundaria: un estudio exploratorio. INFAD Revista de Psicología, International Journal of Developmental and Educational Psychology 1 (2) (2014) 489–499, https://doi.org/10.17060/ijodaep.2014.n1.v2.465.

[4] A. Méndez-Giménez, J.A. Cecchini-Estrada, D. Méndez-Alonso, J.A. Prieto-Saborit, J. y Fernández-Río, Efecto de las metas de logro y las estructuras de metas de clase 3x2 en la motivación autodeterminada: un análisis multinivel en educación secundaria, An. Psicolog. 34 (1) (2017) 52–62, https://doi.org/10.6018/analesps.34.1.262131.
[5] A. Rodríguez-Fernández, E. Ramos-Díaz, I. Ros, A. y Zuazagoitia, Implicación escolar de estudiantes de secundaria: La influencia de la resiliencia, el autoconcepto y el apoyo social percibido, Educ. XX1 21 (1) (2018) 87–108, https://doi.org/10.5944/educXX1.16026.
[6] S. Suárez Valenzuela, J.M. y Suárez Riveiro, Metas académicas, estilos educativos parentales y su relación con las estrategias de aprendizaje en ESO, Electron. J. Res. Educ. Psychol. 20 (1) (2022) 69–92, https://doi.org/10.25115/ejrep.v20i56.4980.
[7] United Nations, Transforming our world: the 2030 Agenda for Sustainable Development (2015). A/70/L.1, https://documents-dds-ny.un.org/doc/UNDOC/LTD/N15/285/73/PDF/N1528573.pdf?OpenElement.
[8] C. Rodríguez-Menéndez, M.P. Viñuela-Hernández, S. y Rodríguez-Pérez, Hacia una nueva conceptualización del control parental desde la, teoría de la autodeterminación 30 (1) (2018) 179–199, https://doi.org/10.14201/teoredu301179199.
[9] E.L. Deci, R.M. Ryan, Intrinsic Motivation and Self-Determination in Human Behavior, Plenum Press, 1985.
[10] E.L. Deci, R.M. Ryan, Facilitating optimal motivation and psychological well-being across life's domains, Canadian Psychology/Psychologie Canadienne 49 (1) (2008) 14–23. https://doi/10.1037/0708-5591.49.1.14.
[11] R.M. Ryan, E.L. Deci, The what and why of goal pursuits: human needs and the self-determination of behavior, Psychol. Inq. 11 (4) (2000) 227–268. https://doi/10.1207/S15327965PLI1104_01.
[12] R.M. Ryan, E.L. Deci, Self-Determination Theory. Basic Psychological Needs in Motivation, Development, and Wellness, Guilford Press, 2017.
[13] B. Soenens, M. Vansteenkiste, W. Lens, K. Luyckx, L. Goossens, W. Beyers, R. Ryan, Conceptualizing parental autonomy support: adolescent perceptions of promotion of independence versus promotion of volitional functioning, Dev. Psychol. 43 (2007) 633–646. https://doi:10.1037/0012-1649.43.3.633.
[14] J. Stover, F. Bruno, F. Uriel, M. y Fernández, Teoría de la Autodeterminación: una revisión teórica, Perspect. Psicol.: Revista de Psicología y Ciencias Afines 14 (2) (2017) 105–115. http://hdl.handle.net/11336/73304.
[15] S. Suárez Valenzuela, J.M. y Suárez Riveiro, Las estrategias de aprendizaje y las metas académicas en función del género, los estilos parentales y el rendimiento en estudiantes de secundaria, Rev. Complut. Educ. 30 (1) (2019) 167–184, https://doi.org/10.5209/RCED.56057.
[16] B. Soenens, M. Vansteenkiste, A theoretical upgrade of the concept of parental psychological control: proposing new insights on the basis of self-determination theory, Dev. Rev. 30 (2010) 74–99. https://doi:10.1016/j.dr.2009.11.001.
[17] S. Torío López, J.V. Peña Calvo, M.C. y Rodríguez Menéndez, Estilos educativos parentales: revisión bibliográfica y reformulación teórica, Teoría de la Educación. Revista Interuniversitaria 20 (2008) 151–178. http://hdl.handle.net/10366/71805.
[18] J.L. Gaviria, in: Prólogo. En Consejo Escolar del Estado, La participación de las familias en la educación escolar, Ministerio de Educación, Cultura y Deporte, 2014, pp. 13–18.
[19] W.H. Jeynes, Parental Involvement and Academic Success, Routledge, 2011.
[20] M. Inda-Caro, C. Rodríguez-Menéndez, C.M. Fernández-García, M.P. y Viñuela-Hernández, Rol de las Metas Parentales Orientadas al Logro de la Tarea en el Autoconcepto de Estudiantes Universitarios, Revista Iberoamericana de Diagnóstico y Evaluación-e Avaliação Psicológica 3 (56) (2020) 143–158, https://doi.org/10.21865/RIDEP56.3.11.
[21] G.A. Mageau, J.S. Bureau, F. Ranger, M.P. Allen, B. Soenens, The role of parental achievement goals in predicting autonomy-supportive and controlling parenting, J. Child Fam. Stud. 25 (5) (2016) 1702–1711, https://doi.org/10.1007/s10826-015-0341-1.
[22] E. Gonida, K. Cortina, Parental involvement in homework: relations with parent and student achievement-related motivational beliefs and achievement, Br. J. Educ. Psychol. 84 (2014) 376–396, https://doi.org/10.1111/bjep.12039.
[23] R. Ryan, E. Deci, W. Grolnick, J. La Guardia, The significance of autonomy and autonomy support in psychological development and psychopathology, 2 ed., vol. 1, in: D. Cichetti (Ed.), Developmental Psychopathology. Theory and Method, John Wiley & Sons Inc, Hoboken, 2006, pp. 795–849.
[24] B.J. Zimmerman, D.H. Schunk, Self-regulated learning and performance: an introduction and an overview, in: B.J. Zimmerman, D.H. Schunk (Eds.), Handbook of Self-Regulation of Learning and Performance, Routledge/Taylor & Francis Group, 2011, pp. 1–12.
[25] Council of Europe, Recommendation Rec (2006) 19 of the Committee of Ministers to Member States on Policy to Support Positive Parenting, Council of Europe, 2006. https://search.coe.int/cm/Pages/result_details.aspx?ObjectID=09000016805d6dda.
[26] European Commission, European Report on the Quality of School Education. Sixteen Quality Indicators, Office for Official Publications of the European Communities, 2000. http://aei.pitt.edu/42406/1/A6503.pdf.
[27] B. Rodríguez-Ruiz, R.A. Martínez-González, E.M. y Ceballos-Vacas, Las tutorías con las familias en Educación Secundaria Obligatoria: percepción de padres, madres y profesorado tutor, Rev. Electrón. Interuniv. Form. del Profr. 22 (3) (2019) 31–43, https://doi.org/10.6018/reifop.389351.
[28] Z.E. Rodríguez-Triana, J.L. y Suárez-Ortíz, Escuelas familiares. Una experiencia favorecedora para el desarrollo humano, Rev. Electrón. Interuniv. Form. del Profr. 22 (3) (2019) 127–138, https://doi.org/10.6018/reifop.390161.
[29] S. Torío López, J.V. Peña Calvo, O. García Pérez, M. e Inda-Caro, Evolución de la Parentalidad Positiva: estudio longitudinal de los efectos de la aplicación de un programa de educación parental, Rev. Electrón. Interuniv. Form. del Profr. 22 (3) (2019) 109–126, https://doi.org/10.6018/reifop.389621.
[30] E.E. Rigdon, CFI versus RMSEA: a comparison of two fit indexes for structural equation modeling, Struct. Equ. Model.: A Multidiscip. J. 3 (4) (2009) 369–379, https://doi.org/10.1080/10705519609540052.
[31] M. Tavakol, R. Dennick, Making sense of Cronbach's alpha, Int. J. Med. Educ. 2 (2011) 53–55. http://doi:10.5116/ijme.4dfb.8dfd.
[32] F.B. Baker, The basics of item response theory (2001). http://ericae.net/irt/baker.
[33] F. Samejima, Graded response model, Encyclopedia of Social Measurement 1 (2004) 145–153.
[34] M W y Browne, R. Cudeck, in: En K.A. Bollen, y J.S. Long (Eds.), Alternative Ways of Assessing Model Fit, Testing Structural Equation Models, Sage, Newbury Park, CA, 1993, pp. 136–162.
[35] L.T. Hu, P.M. Bentler, Cutoff criteria for fit indexes in covariance structure analysis: conventional criteria versus new alternatives, Struct. Equ. Model. 6 (1999) 1–55, https://doi.org/10.1080/10705519909540118.
[36] S. Torío López, Cómo Educar? ¿Lo estamos haciendo bien? Contribuyendo al actual debate de la literatura acerca del estilo educativo parental óptimo, Pedagog. Soc. Rev. Interuniv. 29 (2017) 9–17.
[37] C. Alonso Carmona, La educación secundaria y el distanciamiento familiar de la escuela. Un análisis longitudinal, Paper Rev. Soc. 105 (4) (2020) 487–510, https://doi.org/10.5565/rev/papers.2696.
[38] M. Castro, E. Expósito, L. Lizasoain, E. López, E. y Navarro, Principales características de las familias españolas según el nivel de participación en la educación escolar, Participación Educativa. Revista del Consejo Escolar del Estado 4 (7) (2015) 19–28.
[39] Z. Ristić Dedić, B. Jokić, Parental aspirations for their children's upper secondary education from the perspective of pupils at the end of elementary education, Rev. Sociol. 50 (2) (2020) 161–188, https://doi.org/10.5613/rzs.50.2.2.
[40] M.A. Santos Rego, A. Godás Otero, M. y Lorenzo Moledo, Puede la implicación de los padres mejorar el estudio de sus hijos en la escuela? Estud. Sobre Educ. ESE 30 (2016) 9–30. https://doi:10.15581/004.30.9-30.
[41] F. Fajardo Bullón, M. Maestre Campos, E. Felipe Castaño, B. León del Barco, M.I. y Polo del Río, Análisis del rendimiento académico de los alumnos de Educación Secundaria Obligatoria según las variables familiares, Educación XXI 20 (1) (2017) 209–232. https://doi:10.5944/educXX1.17509.
[42] I. Egido, La colaboración familia-escuela: revisión de una década de literatura empírica en España (2010-2019), Bordón 72 (3) (2020) 65–84, https://doi.org/10.13042/Bordon.2020.79394, 2020.
[43] L. Vitola, Regresión Logística: una aplicación en la identificación de variables que inciden en el rendimiento académico, en el área de matemáticas, Revista Educación y Desarrollo Social 9 (1) (2015) 118–131.

[44] A. Pérez-Bóveda, C. y Yániz Álvarez de Eulate, Programas de formación parental. Análisis Comparativo, Revista Española de Orientación y Psicopedagogía 26 (2) (2015) 104–122. https://www.redalyc.org/pdf/3382/338241632008.pdf.

[45] C. Orte Socias, L. Ballester Brage, B. Pascual Barrio, M.A. Gomila Grau, J. y Amer Fer-nández, Las competencias de los formadores en el Programa de Competencia Familiar, un programa de educación familiar basado en la evidencia, Rev. Complut. Educ. 29 (3) (2018) 35–52. https://revistas.ucm.es/index.php/RCED/article/view/53547/4564456547462.

[46] J. Negreiros, L. Ballester, M. Valero, R. Carmo, J. y Da Gama, Una revisión sistemática de la participación en los programas de prevención familiar, Pedagog. Soc. Rev. Interuniv. 34 (2019) 67–80. https://recyt.fecyt.es/index.php/PSRI/article/view/72195/44923.